PoWer Plus+ Series

GeKaMac®

PoWer Plus+ MIG 250 PFC

Manual Instructions

Please Read and Understand This Manual
Before Operating The Welding Machine

www.gedikwelding.com

Attention!

Our Valued Customer,

We kindly request that you obey the warnings mentioned below:

- Definitely have the “Warranty Document” approved when you get the machine.
- Use the machine in a way that is in accordance with the fundamentals that are mentioned in the user’s guide of the machine.
- Refer to the nearest GEDIK WELDING authorized service or the service center of GEDIK WELDING when a problem comes up.

Thank you for prefering one of GeKaMac® products.

INDEX

Page

1. Index 2

2. Safety Rules 3

2.1. Electrical Shock 3

2.2. Arc Rays 3

2.3. Gases and Fumes 3

2.4. Welding Sparks 3

2.5. Electricity and Magnetism 4

3. Electromagnetic Compatibility (EMC) 4

4. General Information and Warnings 5

5. Advantages and General Properties of PoWer Plus+MIG 250 PFC 6

6. Working Principle of PoWer Plus+MIG 250 PFC 7

7. Technical information 8

8. Principles of Welding 8

9. Duty Cycle and Over Heat 9

10. Layout for Front & Rear Panel 10

11. Welding Operation 12

12. Machine Maintenance 14

13. Troubleshooting 15

14. Electrical Principle Drawing 16

15. Warranty Conditions 17

16. Warranty Document 18

2. SAFETY RULES

Protect yourself and others against possible serious injury or death risks. Keep children away. People who have pacemakers in their bodies should consult their doctors before operating the welding machine. Be careful when you are doing operations with your hands on the pieces. Use proper equipment that are necessarry to protect yourself from burns that can be caused by excessive heating of the piece during welding and / or cutting operation. Be sure that all set up, maintenance and repair related operations are performed only by qualified people.

2.1. ELECTRICAL SHOCK

Electrode and the piece that is being worked on or ground circuits are active in terms of electricity while the welding machine is on. Don't touch these active parts with bare hands or wet clothing. Wear dry gloves that have no holes to insulate your hands.

2.2. ARC RAYS

Use a protective mask with a proper filter to protect your eyes from the sparks and the rays of the arc while welding or watching such an actitivity. The head mask and the filtered glasses must meet the ANSI Z87.I standards.

2.3. GASES AND FUMES

Fumes and gases that are harmful to health can form during the welding operation.

Do not inhale these gases or fumes. Keep your head out of the fumes while welding. Provide sufficient ventilation in the arc and / or use fume suction machines to keep fumes and gases out of the breathing area.

2.4. WELDING SPARKS

Put away elements that are fire hazards from the welding area. If this is not possible, cover these hazards to prevent welding sparks from starting a fire. Do not forget that welding sparks and hot materials coming from welding can go on to neighboring areas easily through small cracks and openings. Don't do welding near hydrolic lines. Always keep a fire extinguisher on hand.

2.5. ELECTRIC AND MAGNETISM

Electric flow that passes through a conductor causes Electric and Magnetic Fields (EMF) to be formed. Welding current creates EMF around welding cables and welding machines.

— EMF can ruin the operation of some pacemakers. For this reason, welders who have pacamakers in their bodies should consult their doctors before welding.

— Being exposed to EMF during welding, can cause other unknown health problems.

— Getting exposed to EMF will be minimized by paying attention to the following instructions:

- Guide electrode and chassis cables together.
- Never wrap electrode and chassis cables around your body.
- Do not place your body between the electrode and chassis cables.
- Connect the chassis cable as close to the piece that is being worked on as possible.
- Stay as far away as you can from the power units.

3. ELECTROMAGNETIC COMPATIBILITY (EMC)

This machine has been designed in accordance with all related regulations and norms. Additionally, it can still generate electromagnetic forces that affect other systems such as communications (telephone, radio, television). These affects can cause security problems in the exposed systems. Read carefully and understand this section in order to reduce or get rid of the affects that can be created by this machine.

This machine has been designed to be operated in the industry area. If it is operated in private places (house etc.), it will become necessary to take special precautionary measures in order to prevent possible electromagnetic affects. It is necessary for the user to set up and operate these machines just like the way it is described in the handbook. If an electromagnetic affect is perceived due to the operation of these machines, the user should take corrective measures in order to get rid of these affects. If necessary, the user should contact GEDIK WELDING IND. COM. LTD. CO. No changes should be made in the machine without getting written approval from GEDIK WELDING IND. COM. LTD. CO.

The control of the work area should be made in terms of tools that can work improperly due to the electromagnetic affects before the machine is assembled.

- Inlet and outlet cables, telephone cables and control cables that are found in the work area of the machine.
- Radio and/or television transmitters and receivers,

3. ELECTROMAGNETIC COMPATIBILITY (EMC) (Continuing)

- Computer or computer controlled tools,
- Safety and control equipment for industrial operations,
- Calibration and measurement appliances,
- Medical appliances such as heart rhtyme appliance and hearing aids,

Control the electromagnetic immunity of the equipments that operate near the work area. The user should be certain that all the equipments that are in the work place are compatible. Otherwise, it can necessitate additional protective measures.

Ideal dimensions of the work place are determined by the construction of the area and other factors that are found there. Take the warnings below into consideration in order to decrease the affects of the electromagnetic waves that the machine generates:

* Make the connection of the machine with the network electricity in the way it is stated in the user's guide. If an electromagnetic interaction comes into being, such preventive measures as filtring the main electrical inlet may need to be taken.

* Outlet cables should be as short as possible and should be kept together.

4. GENERAL INFORMATION AND WARNINGS

Do not set up, operate or repair before reading the user's guide and the security measures that are found in it. Hide this user's guide and always have it on hand.

- Cut off the electrical connection between the welding machine and the network when the work is finished or when you are going to take a long break.
- Do not make any changes in the welding machine. This operation can cause the machine to lose its properties and a change in technical data.
- It is forbidden to do adaptation on the welding machine. Doing adaptation does not only cause the loss of warranty rights, but also can jeopardize the operational safety of the machine and can create the risk of electrocution for the users.
- A damage in the welding machine due to a mistake of the user will cause the loss of warranty rights.
- Acceptable environmental temperature range during work is between -10 °C and +40 °C.
- Acceptable relative humidity rate is 95% at 20 °C.
- Manufacturing company reserves the right to change the technical properties without prior notice.

5. ADVANTAGES AND GENERAL PROPERTIES OF PoWer Plus+MIG 250 PFC

Plus+MIG SERIES arc welding machine adopts the latest pulse width modulation (PWM) technology and insulated gate bipolar transistor (IGBT) power module, which can change work frequency to medium frequency so as to replace the traditional hulking work frequency transformer with the cabinet medium frequency transformer. Thus, it is characterized with portable, small size, light weight, low consumption and etc.

MIG SERIES arc welding machine uses Mix gas as shielded gas to realize gas shielded welding, active gas（$Ar+O_2$, $Ar+CO_2$） as shielded gas to realize MAG welding and inactive gas（Ar） as shielded gas to realize MIG welding.

MIG SERIES arc welding machine has automatic protection functions with intelligent to over-voltage, over-current and over-heat. If any one of the above problems happens, the alarm lamp on the front panel will be lighted and output current will be shut off automatically to protect itself and prolong the equipment using life.

Plus+MIG SERIES Features:

1. Digital control system, real-time display the welding parameters;
2. High performance multifunction power source (MMA/MIG/MAG);
3. Waveform control, stable welding arc;
4. IGBT technology, low power dissipation;
5. Rated duty circle is 40% (40 C°).

PoWer Plus+MIG 250 PFC has another feature: Synergic control of the welding current and voltage.

Plus+MIG SERIES arc welding machine is suitable for all positions welding for various plates made of stainless steel, carbon steel, alloyed steel, copper, titanium, etc, which is also applied to pipe installment, mould mend, petrochemical, architecture decoration, car repair, bicycle, handicraft and common manufacture.

MAG---Metal Active Gas Welding

MIG---Metal Insert Gas Welding

PWM——Pulse-Width Modulation

IGBT——Insulation Gate Bipolar Transistor

TIG——Tungsten Insert Gas welding

6. WORKING PRINCIPLE OF PoWer Plus+MIG 250 PFC

The working principle of MIG SERIES arc welding machine is shown as the following figure. Single-phase 220V work frequency AC is rectified into DC（350V）, then is converted to medium frequency AC (about 40 kHz) by inverter device (IGBT), after reducing voltage by medium transformer (the main transformer) and rectifying by medium frequency rectifier (fast recovery diodes), and is outputted by inductance filtering. The circuit adopts current feedback control technology to insure current output stably when MMA or TIG. And adopts voltage feedback control technology to insure voltage output stably when MIG. Meanwhile, the welding current parameter can be adjusted continuously and infinitely to meet with the requirements of welding craft.

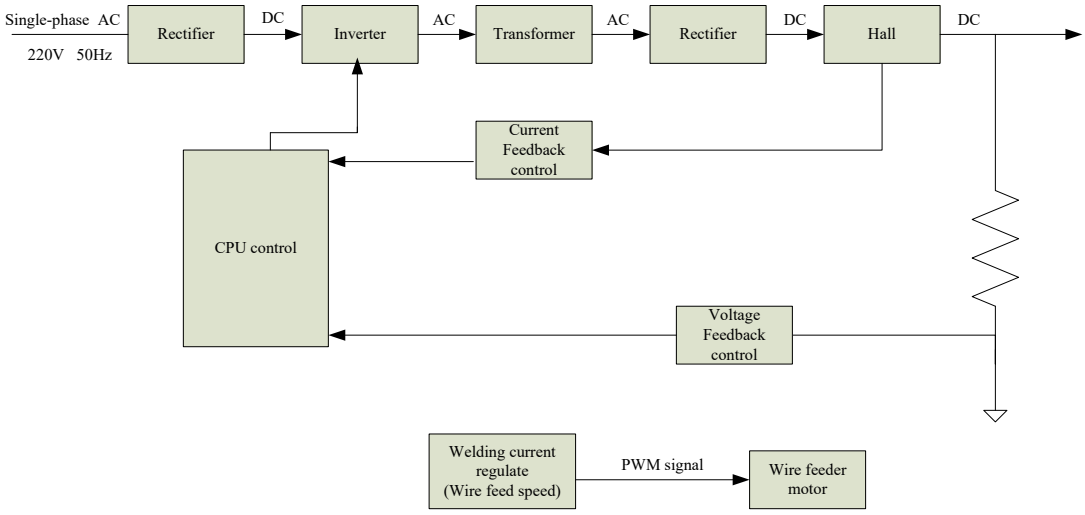

VOLT-AMPER CHARACTERISTIC:

$U_2 = 14 + 0.05\, I_2$ (V)

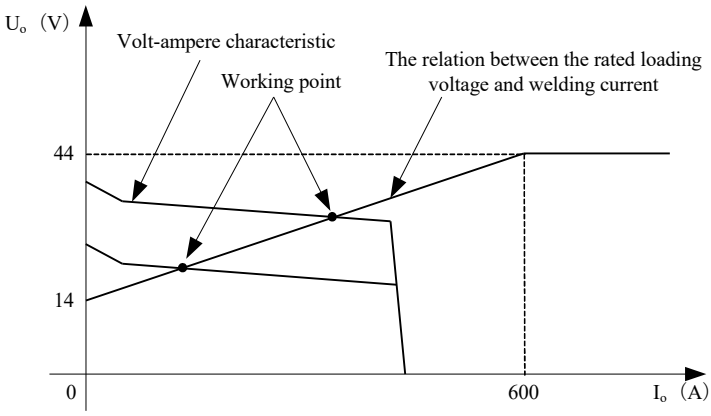

7. TECHNICAL INFORMATION

Model / Parameters	PoWer Plus+MIG 250 PFC		
Input Voltage（V）	1~220/230/240±10%		
	MIG	MMA	TIG
Input Current（A）	37,0	41,0	28,5
Input Power（KW）	8,3	9,2	6,4
Welding Current（A）	40-200		
No-load Voltage（V）	65		
Duty cycle（40 ）	35% 250A	30% 250A	35%250A
	60% 195A	60% 180A	60% 195A
	100% 150A	100% 140A	100% 150A
Diameter(mm)	Fe：0.6/0.9/1.0 Ss： 0.8/0.9/ 1.0 Flux-Cored：0.6/0.8/0.9/1.0		
Protection class	IP23		
Insulation class	H		
Dimensions（mm）	618*240*445		
Weight（Kg）	23		

8. PRINCIPLES OF WELDING

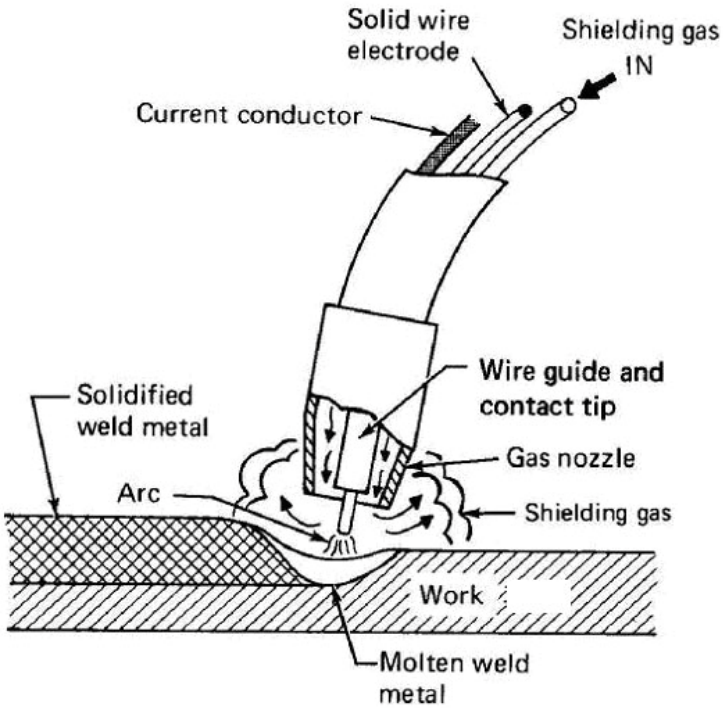

9. DUTY CYCLE AND OVER HEAT

The letter “X” stands for the duty cycle, which is defined as the proportion of the time that a machine can work continuously within a certain time (10 minutes). The rated duty cycle means the proportion of the time that a machine can work continuously within 10 minutes when it outputs the rated welding current.

The relation between the duty cycle “X” and the output welding current “I” is shown as the right figure.

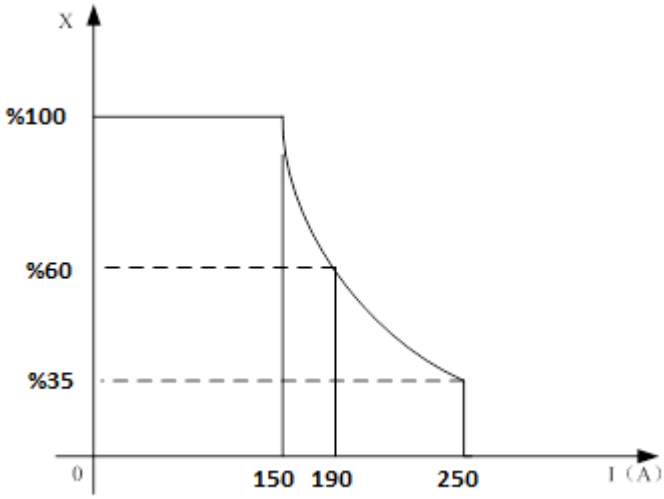

10. LAYOUT FOR FRONT & REAR PANEL

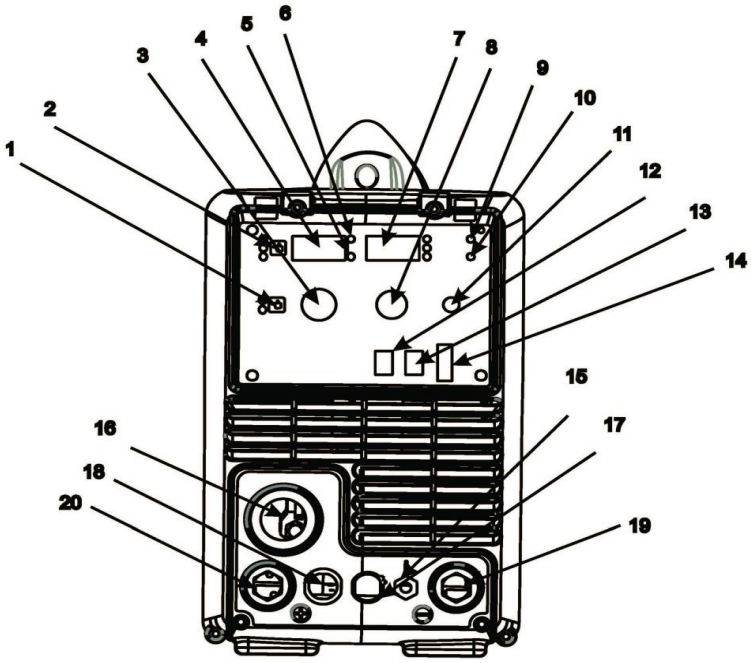

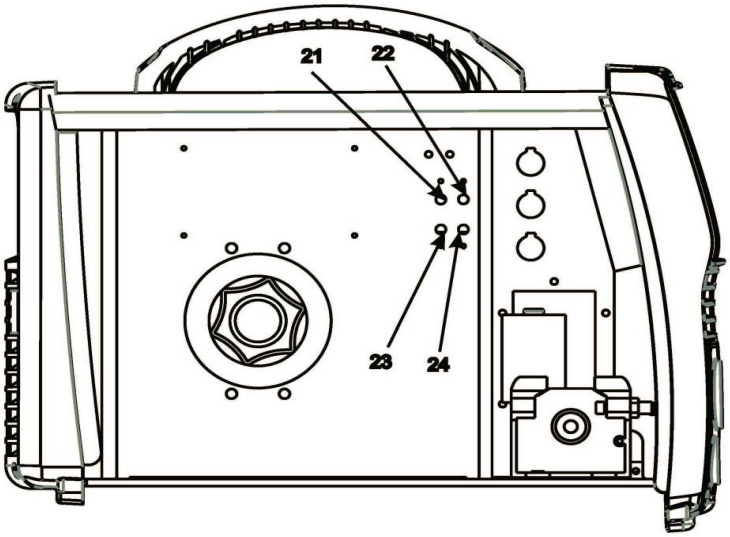

1. Choose welding mode key: On TIG or MIG, Pressing the key can choose 2T or 4T welding mode.

2. Choose welding method key: Pressing the key can choose three function, MMA/TIG/MIG.

3. Welding current knob: Set the welding current.

4. Current display: Welding Current display when machine is working, Set current display before welding. Unit：A.

10. LAYOUT FOR FRONT & REAR PANEL (Continuing)

5. Current LED： When the current LED is on, it display the actual output welding current(MIG).

6. Wire speed LED： You can use current setting knob to set the wire speed when the wire speed LED is on(MIG).

7. Voltage display: Welding voltage display when machine is working, Set voltage display when MIG mode before welding. Unit：V.

8. Welding voltage/Down slope/Arc force knob: On MIG, When the program voltage can't perfectly match the welding current, the knob can adjust voltage On TIG, the knob can adjust the current down time. On MMA, the knob can adjust the force current.

9. Power Led: Power led is lighted when open the machine.

10. Alarm Led: When the welder is over voltage, less voltage, over current or over heated, the alarm pilot lamp will be on.

11. Wave control knob: Controls arc characteristics, Determines the rate at which the amperage rises when a short circuit is produced.

12. Romote Switch

13. Spool Gun Switch: You can control the spool gun function active(ON) or not(OFF), at the same time ,you must make the Switch 14 in "ON" mode;

14. Manual wire switch & air check switch: up for manual wire and down for air check.

15. TIG GAS Connect

16. MIG GUN Connect.

17. Polarity conversion: connect to"+",the MIG gun connecter will be "+",connect to "-",the MIG gun connecter will be "-";

18. TIG gun control connecter.

19. Output cathode： When MIG mode, this polarity must connect the work piece

20. Output anode: When TIG mode, this polarity must connect the work piece

21. Burnback knob

22. Slow feed knob

23. Post flow knob

24. Pre-flow knob

11. WELDING OPERATION

MIG mode operation:

1. Shielding Gas choice

1) When the wire material is Fe, the shielding gas is 80%Ar + 20%CO2 ;

2) When the wire material is Ss, the shielding gas is 98%Ar + 2%O2 ;

3) When the wire material is Al, the shielding gas is 100%Ar.

2. Welding state choice

1)Press the weld manner key, choose MIG manner and the MIG LED is lighted;

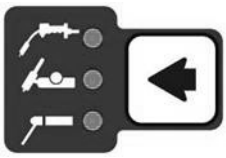

2) Spool Gun Switch turn off(down).

3) Manual wire switch & air check switch， Burnback adjust， Slow feed adjust,Post flow adjust, Pre-flow knob adjust;

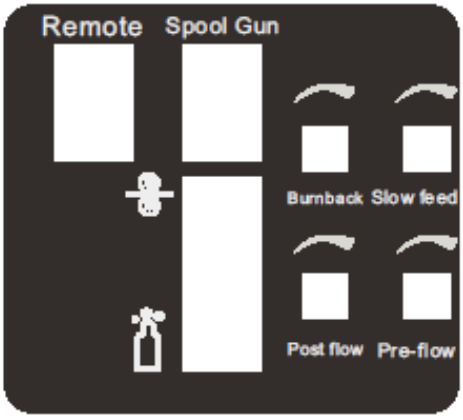

4) Press the welding mode key, choose 2T or 4T;

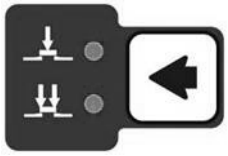

5) Spool Gun Switch turn on(up):

11. WELDING OPERATION (Continuing)

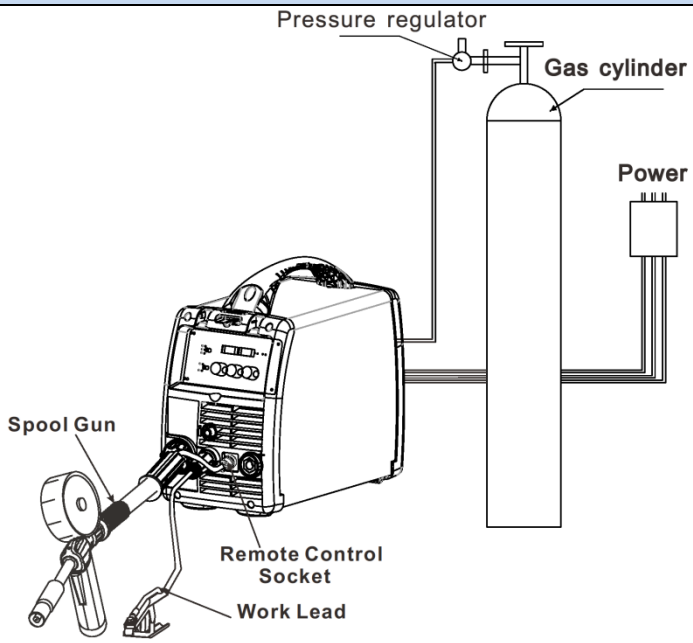

Setup for Spool Gun welding with gas shielded MIG wire

3. Adjust Welding parameter

1) Different wire diameter ,the minimum welding current is different；

2) Adjust the current knob , the corresponding welding voltage is changed automatically；

3) When the programmable welding voltage isn't the perfect for the operator, the voltage can be changed tinily by adjusted the knob；

4) If the operator adjust the wave control knob, the arc characteristics can be controlled；

TIG mode operation:

1. Press the weld manner key, choose TIG manner and the TIG LED is lighted；
2. Press the welding mode key, choose 2T or 4T；
3. Adjust the current knob to control the welding current；
4. Adjust the down slope knob to control the welding current descend time.

MMA mode operation:

1. Press the weld manner key, choose MMA manner and the MMA LED is lighted；
2. Adjust the current knob to control the welding current；
3. Adjust the welding arc force knob to control the arc force current.

Note：The current display is preset current before welding and is welding current when welding. The voltage display is real voltage.

12. MACHINE MAINTENANCE

In order to guarantee that arc welding machine works high-efficiently and in safety, it must be maintained regularly. Let customers understand the maintenance methods and means of arc welding machine more , enable customers to carry on simple examination and safeguarding by oneself, try one's best to reduce the fault rate and repair times of arc welding machine, so as to lengthen service life of arc welding machine .Maintenance items in detail are in the following table.

● **Warning: For safety while maintaining the machine, please shut off the supply power and wait for 3 minutes, until capacity voltage already drops to safe voltage 36V.**

Date	Maintenance item
Daily examination	Observe that whether panel knob and switch in the front and at the back of arc welding machine are flexible and put correctly in place. If the knob has not been put correctly in place, please correct; If you can't correct or fix the knob , please replace immediately;
	If the switch is not flexible or it can't be put correctly in place, please replace immediately; Please get in touch with maintenance service department if there are no accessories.
	After turn-on power, watch/listen to that whether the arc welding machine has shaking, whistle calling or peculiar smell. If there is one of the above problems, find out the reason to get rid of; if you can't find out the reason, Please contact local this area agent or the branch company.
	Observe that whether the display value of LED is intact. If the display number is not intact, please replace the damaged LED. If it still doesn't work, please maintain or replace the display PCB.
	Observe that whether the min/max value on LED accords with the set value. If there is any difference and it has affected the normal welding craft, please adjust it.
	Check up that Whether fan is damaged and is normal to rotate or control. If the fan is damaged, please change immediately. If the fan does not rotate after the arc welding machine is overheated , observe that whether there is something blocked in the blade, if it is blocked, please get rid of ; If the fan does not rotate after getting rid of the above problems, you can poke the blade by the rotation direction of fan. If the fan rotates normally, the start capacity should be replaced ; If not, change the fan.
	Observe that whether the fast connector is loose or overheated. if the arc welding machine has the above problems, it should be fastened or changed.
	Observe that Whether the current output cable is damaged. If it is damaged, it should be wrapped up, insulated or changed.
Monthly examination	Using the dry compressed air to clear the inside of arc welding machine. Especially for clearing up the dusts on radiator, main voltage transformer, inductance, IGBT module, the fast recover diode and PCB, etc.
	Check up the bolt in arc welding machine, if it is loose, please screw down it. If it is skid, please replace. If it is rusty, please erase rust on bolt to ensure it works well.
Quarter- yearly examination	Whether the actual current accords with the displaying value. If they does not accord, they should be regulated. The actual current value can be measured by the adjusted plier-type ampere meter.
Yearly examination	Measure the insulating impedance among the main circuit, PCB and case, if it below 1MΩ, insulation is thought to be damaged and need to change , and need to change or strengthen insulation.

13. TROUBLESHOOTING

- Before arc welding machines are dispatched from the factory, they have already been debugged accurately. So forbid anyone who is not authorized by our company to do any change to the equipment!
- Maintenance course must be operated carefully. If any wire becomes flexible or is misplaced, it maybe potential danger to user!
- Only professional maintenance personal who is authorized by our company could overhaul the machine!
- Guarantee to shut off the arc welding machine's power before turn on the outline of the equipment!
- If there is any problem and has no the authorized professional maintenance personal of our company, please contact local our company agent or the branch company!

NO.	Troubles			Reasons	Solution
1	Close the breaker, but the power light isn't on			Breaker damaged	Change it
				Fuse damaged	Change it
				Power damaged	Change it
2	After welding machine is over-heat, the fan doesn't work			Fan damaged	Change it
				The cable is loosen	Screw the cable tightly
3	Press the gun switch, no output shielded gas	No output gas when test gas		No gas in the gas cylinder	Change it
				Gas pipe leaks gas	Change it
				Electromagnetic valve damaged	Change it
		Output gas when test gas		Control switch damaged	Repair the switch
				Control circuit damaged	Check the board
4	Wire-feeder doesn't work		Wire reel doesn't work	Motor damaged	Check and change it
				Control circuit damaged	Check the board
			Wire reel works	The press wheel is loosen or weld wire skids	Press it tightly again
				The wheel doesn't fit with the diameter of weld wire	Change the wheel
				Wire reel damaged	Change it
				Wire feed pipe is jammed	Repair or change it
				Tip is jammed because of splash	Repair or change it
5	No striking arc and no output voltage			Output cable is connected mistakenly, or loosen	Screw it down or change it
				Control circuit damaged	Check the circuit
6	Welding stops, and alarm light is on			Machine has self-protection	Check over-voltage, over-current, over-temperature, lower-voltage and over-temperature, and solve it
7	Welding current is run away and can be not controlled			The potentiometer damaged	Check or change it
				The control circuit damaged	Check the circuit
8	The crater current can be not adjusted			The PCB damaged	Check it
9	No post-gas			The PCB damaged	Check it

14. ELECTRICAL PRINCIBLE DRAWING

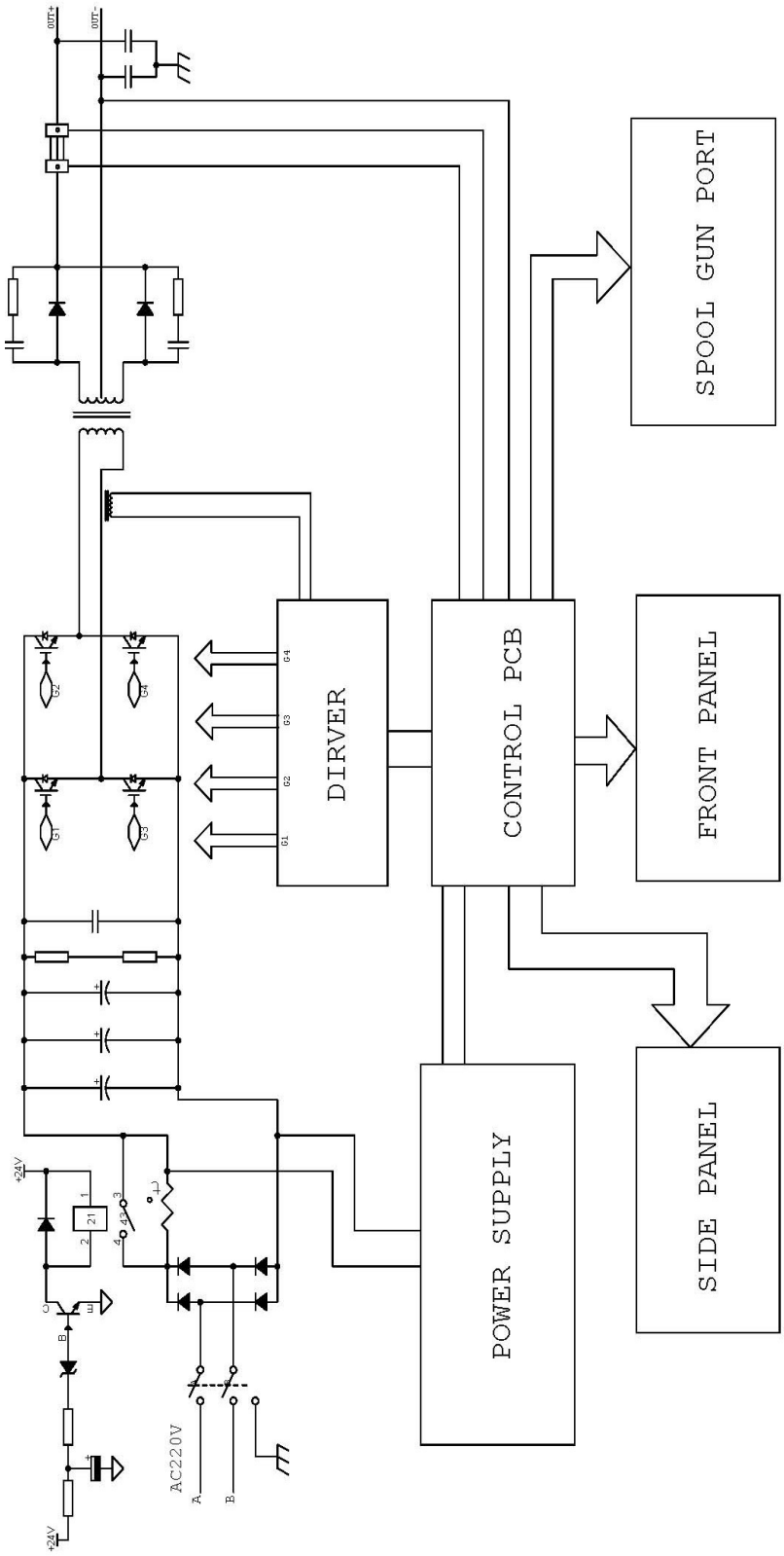

15. WARRANTY CONDITIONS
1. The length of the warranty starts on the date of delivery and it is for 1 year. 2. The whole merchandise including all its parts are covered by the warranty of our company. 3. If the merchandise breaks down within the length of the warranty, the time spent in the repair shop will be added to the length of the warranty. The length of repair of the merchandise is at the maximum 20 working days. This period of time starts on the date that the merchandise was delivered at one of the following locations: A service station or the seller of the merchandise or dealer or agency or representation office or importer or manufacturer, in this order if there are no service stations. 4. If the merchandise breaks down either due to material and workmanship or assembly lines within the length of the Warranty, it will be repaired without demanding any money under the name of expenditure of workmanship, the cost of the changed piece or under any other name. 5. Replacement operation will be done without charge in cases where the merchandise repeats the same fault more than twice or different faults come up more than four times within the length of the warranty, the length of the repair exceeds maximum necessary time and the determination of the unrepairability of the merchandise by a report that is prepared either by a service station or the seller or a dealer or an agency or a representation office or the importer or the manufacturer, in this order, if there are no service stations. 6. Faults that are results of misuse according to the user's guide of the merchandise are not covered by the warranty. 7. Ministry of Science Industry and Technology, The Protection of the Consumer and Competition General Directorate can be refered to whenever a problem concerning the warranty document comes up. 8. Earth clamp and welding kits are not under warranty.

GeKaMac®

Gedik Welding Machines

Warranty Document

MACHINE INFORMATION

Brand : GeKaMac®

Model : ……

Serial Number : ……

CUSTOMER INFORMATION

Company Name : ……

Authorized Person : ……

Telephone : ……

Company Address : ……

City/Country…… ……

E-Mail :…… @……

Signature /Cachet :

SERVICE INFORMATION

Authorized Service : ……

Service Staff : ……

Installation Date : ……/……/……

Warranty Starting Date : ……

Warranty Expiration Date : ……

Signature /Cachet :

GeKaMac®

Gedik Welding Machines

Warranty Document

MACHINE INFORMATION

Brand : GeKaMac®

Model : ……

Serial Number : ……

CUSTOMER INFORMATION

Company Name : ……

Authorized Person : ……

Telephone : ……

Company Address : ……

City/Country…… ……

E-Mail :…… @……

Signature /Cachet :

SERVICE INFORMATION

Authorized Service : ……

Service Staff : ……

Installation Date : ……/……/……

Warranty Starting Date : ……

Warranty Expiration Date : ……

Signature /Cachet :

Manufacturer:
Company Name: Shanghai HI-ZONE Welding Equipment Manufacture Co.,Ltd.
Company adress: A-2nd Floor, No.99-3, Shenmei Road, Zhoupu, Pudong, Shanghai 201318 China
Contact Details: T: +86 21 31295500 | F: +86 21 51919711

Importer:
Gedik Kaynak San ve Tic A.Ş
Company Adress: Ankara Cad No: 306 Seyhli 34906 Pendik, Istanbul
TURKEY
Contact Details: +90 216 3785000

PoWer Plust Series

GeKaMac®

Gedik Welding Ankara Caddesi
No : 306 Şeyhli 34906 Pendik, İstanbul / Turkey
T +90 216 378 50 00 F +90 216 378 20 44
gedik@gedik.com.tr